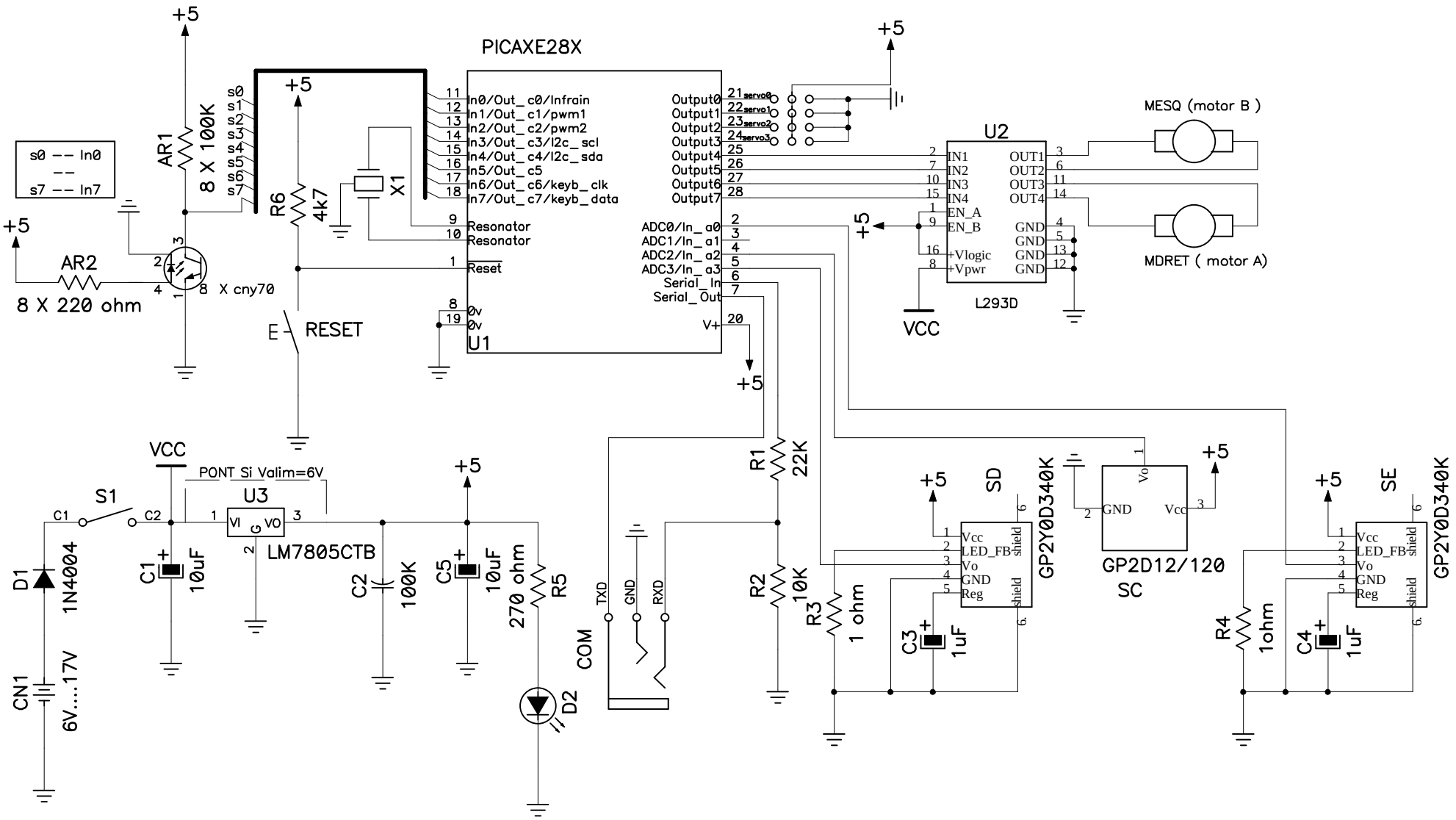
PICAXE28X
U1
U2
L293D
MESQ (motor B)
MDRET (motor A)
AR1
8 X 100K
AR2
8 X 220 ohm
X cny70
R6
4k7
X1
RESET
s0 -- In0
s7 -- In7
In0/Out_ c0/Infrain
In1/Out_ c1/pwm1
In2/Out_ c2/pwm2
In3/Out_ c3/I2c_ scl
In4/Out_ c4/I2c_ sda
In5/Out_ c5
In6/Out_ c6/keyb_ clk
In7/Out_ c7/keyb_data
Resonator
Reset
ADC0/In_ a0
ADC1/In_ a1
ADC2/In_ a2
ADC3/In_ a3
Serial_ In
Serial_ Out
Output0
Output1
Output2
Output3
Output4
Output5
Output6
Output7
IN1
IN2
IN3
IN4
EN_A
EN_B
+Vlogic
+Vpwr
OUT1
OUT2
OUT3
OUT4
GND
VCC
PONT Si Valim=6V
S1
U3
LM7805CTB
C1
10uF
C2
100K
C5
10uF
270 ohm
R5
D1
1N4004
CN1
6V....17V
D2
COM
TXD
RXD
R1
22K
R2
10K
R3
1 ohm
SD
SE
GP2Y0D340K
GP2D12/120
SC
C3
1uF
C4
1uF
R4
1ohm
Vcc
LED_FB
Vo
Reg
shield